TABLE OF CONTENTS

	Content	Page No.
1.	**Concept of the project**	**4**
1.1	Introduction to project	4
1.2	Motivation	5
1.3	Problem Statement	5
1.4	Literature survey	6
1.5	Objectives	7
1.6	Areas of Application	7
1.7	Benefits	8
2.	**Design of the project**	**9**
2.1	Block Diagram	9
2.2	Architectural Design	9
2.2.1	4 Bit Kogge Stone Adder	9
2.2.2	4 Bit Brent Kung Adder	10
2.2.3	4 Bit Han Carlson Adder	10
2.2.4	4 Bit Ladner Fischer Adder	11
2.2.5	4 Bit Weinberger Adder	11
3.	**Implementation of the project**	**12**
3.1	Components/tools used	12
3.2	Schematic Illustration and Waveforms in Cadence tool	13
3.2.1	4 Bit Kogge Stone Adder	13
3.2.1.1	Schematic	13
3.2.1.2	Test Bench	13
3.2.1.3	Output waveforms	14
3.2.2	4 Bit Brent Kung Adder	15
3.2.2.1	Schematic	15
3.2.2.2	Test Bench	15
3.2.2.3	Output waveforms	16
3.2.3	4 Bit Han Carlson Adder	17
3.2.3.1	Schematic	17
3.2.3.2	Test Bench	17

3.2.3.3	Output waveforms	18
3.2.4	4 Bit Ladner Fischer Adder	19
3.2.4.1	Schematic	19
3.2.4.2	Test Bench	19
3.2.4.3	Output waveforms	20
3.2.5	4 Bit Weinberger Adder	21
3.2.5.1	Schematic	21
3.2.5.2	Test Bench	21
3.2.5.3	Output waveforms	22
3.3	Description of Internal Components	22
3.3.1	PG Block	22
3.3.2	Black Cell	23
3.3.3	Gray Cell	23
3.3.4	Post Processing Cell	24
4.	**Results of the project**	**25**
4.1	Power Consumption	25
4.2	Transistor Count	25
4.3	Delay	26
5.	**Summary**	26
6.	**Conclusion**	26

CHAPTER - 1
1. CONCEPT OF THE PROJECT

1.1 Introduction to project

In the realm of digital circuit design, adder circuits are indispensable components that facilitate arithmetic operations essential for a wide array of computational tasks. These fundamental building blocks are integral to the efficiency and functionality of digital systems, ranging from simple calculations to complex mathematical operations. Adders are ubiquitous in digital integrated circuit design and are particularly critical in Digital Signal Processing (DSP) applications, where they form the backbone of arithmetic units. Consequently, a deep understanding of the characteristics and performance of various adder circuits is crucial for the design of optimized digital systems.

This project aims to conduct a comprehensive comparison of different adder architectures using Cadence design tools. By evaluating parameters such as propagation delay, power consumption, area, and design complexity, we can gain insights into the trade-offs and advantages of each architecture. This exploration will aid in selecting the most suitable adder type for specific applications, contributing to the development of more efficient and effective digital circuits.

Our investigation includes a diverse spectrum of adder architectures, each with its unique design philosophy and performance characteristics:

- **4-bit Kogge Stone Adder:** Known for its parallel prefix computation, this adder reduces the carry propagation delay, making it highly efficient for fast addition operations.
- **4-bit Brent Kung Adder:** Utilizes a parallel prefix approach with a more balanced trade-off between area and speed, optimizing the carry generation and propagation stages.
- **4-bit Han Carlson Adder:** Combines elements of both carry-lookahead and parallel prefix adders, aiming to minimize delay while maintaining a moderate area overhead.
- **4-bit Ladner Fischer Adder:** Emphasizes efficient carry computation through a structured prefix network, balancing speed and complexity.
- **4-bit Weinberger Adder:** Focuses on optimizing the carry propagation process to achieve a faster addition with reduced logic levels.

By implementing and simulating these adders in Cadence, we aim to provide a detailed comparative analysis that highlights their performance metrics and suitability for various digital applications. This report documents the design process, simulation results, and critical observations, offering a comprehensive guide for digital circuit designers in selecting the optimal adder architecture for their needs.

1.2 Motivation

The motivation for this project stems from the pivotal role that adders play in the design and functionality of digital systems. As fundamental building blocks in digital integrated circuits, adders are crucial for executing arithmetic operations which are at the core of numerous computational tasks. This importance is particularly evident in Digital Signal Processing (DSP) applications, where efficient arithmetic operations directly impact the overall performance and energy efficiency of the system.

In modern digital design, optimizing performance, reducing power consumption, and minimizing area are critical objectives. Each adder architecture offers unique advantages and trade-offs in these aspects. For instance, some adders prioritize speed by minimizing propagation delay, while others focus on reducing power consumption or the silicon area used. Understanding these trade-offs is essential for designing high-performance, low-power digital systems.

Additionally, the rapid advancement of semiconductor technology and the increasing complexity of digital circuits necessitate a thorough analysis and comparison of various adder designs. By leveraging Cadence design tools, this project aims to provide a detailed evaluation of multiple adder architectures, including the Kogge Stone, Brent Kung, Han Carlson, Ladner Fischer, and Weinberger adders. Such a comparative study will offer valuable insights into the strengths and weaknesses of each design, guiding engineers and researchers in selecting the most appropriate adder for their specific applications.

Ultimately, the goal is to contribute to the development of more efficient digital systems by identifying the optimal adder architectures that balance speed, power consumption, and area. This project not only enhances our understanding of different adder designs but also aids in advancing the field of digital circuit design through informed decision-making and innovative engineering solutions.

1.3 Problem Statement

In the realm of digital circuit design, selecting the appropriate adder architecture is critical for achieving optimal performance and resource utilization in various computational tasks. This project aims to compare the performance and resource utilization of two prominent adder architectures using Cadence tools. Through empirical experimentation and rigorous analysis, the project seeks to contribute to the advancement of digital engineering knowledge and pave the way for more efficient and robust computing technologies. By providing a detailed comparative analysis, this research aims to enhance the understanding of different adder designs and their suitability for specific applications, ultimately leading to more efficient digital systems. The findings from this study are expected to inform design choices in future digital circuits, optimizing both speed and power consumption to meet the evolving demands of modern computing applications.

1.4 Literature Survey

SL. NO	AUTHORS	YEAR	TITLE	DESCRIPTION
1.	Anas Zainal , Syed Junid, Khairul Sharif, Z.Othman, Muhammad Adib Haron	2012	4-bit Brent Kung Parrallel Prefix Adder Simulation Study Using Silvaco EDA Tools	This research assesses the performance of a 4-bit Brent Kung Parallel Prefix Adder in 0.18um Silterra Technology using Silvaco EDA Tools.
2.	Amit Kumar Panda and Kailash Chandra Ray	2015	FPGA Prototype of Low Latency BBS PRNG	This paper presents a hardware design utilizing adder for efficient computation and architecture of black and grey cell
3.	U Penchalaiah, Siva Kumar VG	2018	Design of High-Speed and Energy-Efficient Parallel Prefix Kogge Stone Adder	This paper proposes the Kogge Stone adder (KSA) as a superior alternative to the Carry Skip adder (CSKA) for mobile devices, offering reduced power consumption and higher speed.
4.	Prashasti, Shivangi Jaiswal, Anam Khan , and Subodh Wairya	2020	Design and Performance Evaluation of Highly Efficient Adders in Nanometer Technology	This paper showcases optimized 4-bit adder designs, leveraging energy-efficient XOR-XNOR gates for superior speed and power performance. Additionally, it features a schematic of the Weinberger adder for comprehensive analysis.
5.	Mr. Ashish V. Ughade, Prof. Rajal H. Deshmukh, Mr. Akshay P. Nanote	2016	Design of Han Carlson Adder for Implementation of CSLA	This paper introduces a novel approach to optimize carry select adders (CSLA), aiming to reduce area and delay while maintaining power requirements. By integrating Han Carlson design into the first level of a 32-bit SQRT CSLA, significant improvements are anticipated compared to conventional techniques.
6.	Pakkiraiah Chakali, Madhu Kumar Patnala	2013	Design of High Speed Ladner-Fischer Based Carry Select Adder	This paper introduces a high-speed Carry Select Adder using parallel prefix adders, aiming to reduce delay while maintaining area efficiency. Additionally, it discusses the application of Ladner Fischer adder within the context of CSLA design optimization, providing insights into further enhancing performance metrics.

1.5 Objectives

- **Compare Adder Architectures:** To perform a detailed comparative analysis of two prominent adder architectures using Cadence tools.

- **Evaluate Performance Metrics:** To measure and compare key performance metrics such as propagation delay, power consumption, and area for each adder design.

- **Optimize Design Efficiency:** To identify the strengths and weaknesses of each adder architecture in terms of efficiency, aiming to optimize their design for specific applications.

- **Empirical Validation:** To conduct rigorous empirical experimentation to validate the theoretical performance claims of each adder architecture.

- **Resource Utilization Analysis:** To assess the resource utilization of each adder architecture, focusing on how efficiently each design uses silicon area and power.

- **Contribute to Digital Engineering Knowledge:** To contribute valuable insights and data to the field of digital engineering, helping to inform future design decisions and advancements.

- **Support Robust Computing Technologies:** To pave the way for the development of more efficient and robust computing technologies by providing a comprehensive understanding of adder architectures.

- **Guidance for Future Designs:** To offer practical guidance for engineers and designers in selecting the most suitable adder architecture for their specific digital circuit applications.

1.6 Areas of Applications

- **Microprocessors and Microcontrollers:** Performing essential arithmetic operations in general computing and embedded systems, impacting a wide range of devices from computers to home appliances.

- **Digital Signal Processing (DSP):** Enhancing audio and video processing, critical for applications in smartphones, televisions, and medical imaging equipment.

- **Communication Systems:** Ensuring data integrity and security through error detection, correction, and cryptographic algorithms, vital for networking and telecommunications.

- **Arithmetic Logic Units (ALUs):** Core components in CPUs and GPUs, executing fundamental arithmetic and logical operations necessary for all types of computing tasks.

- **Artificial Intelligence and Machine Learning:** Efficiently processing large datasets and performing matrix operations in AI models, crucial for advancements in fields like finance, healthcare, and autonomous systems.

1.7 Benefits

- **Improved Performance:** Optimal adder architectures lead to faster arithmetic operations, enhancing the overall performance of digital systems in various applications.

- **Enhanced Efficiency:** By minimizing power consumption and area utilization, efficient adder designs contribute to energy-efficient and compact digital circuit implementations.

- **Cost Reduction:** Efficient adder architectures can reduce manufacturing costs by requiring fewer resources and lower power consumption, making digital systems more cost-effective.

- **Increased Reliability:** With optimized adder designs, digital systems can operate more reliably, reducing the risk of errors and improving the overall robustness of the system.

- **Advanced Capabilities:** Efficient adder architectures enable the implementation of advanced arithmetic operations, facilitating the development of more sophisticated digital applications and technologies.

CHAPTER – 2

DESIGN OF THE PROJECT

2.1 Block Diagram

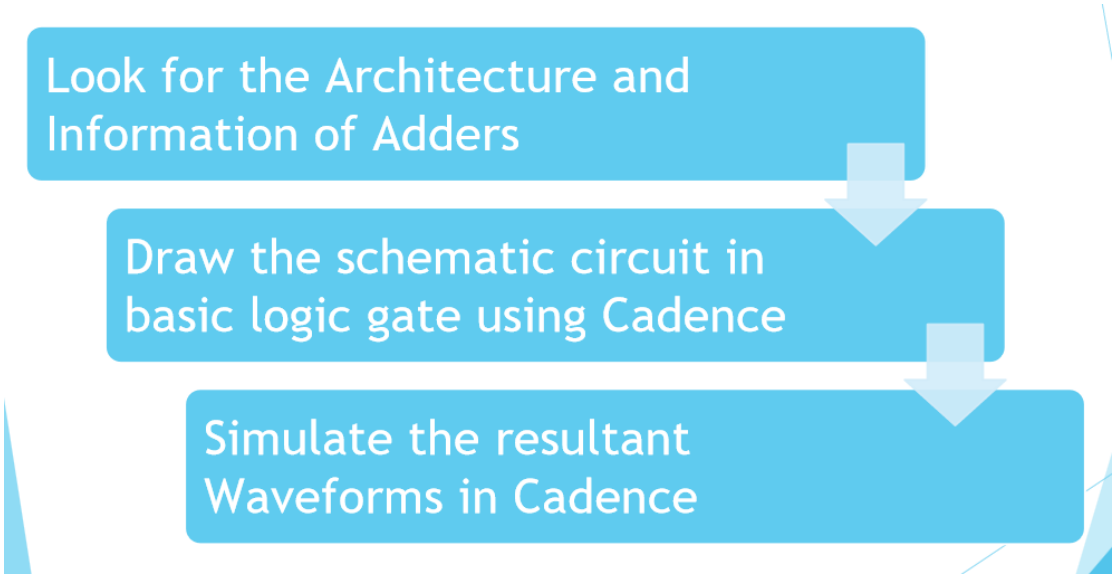

2.2 Architectural Design

2.2.1 4-Bit Kogge Stone Adder

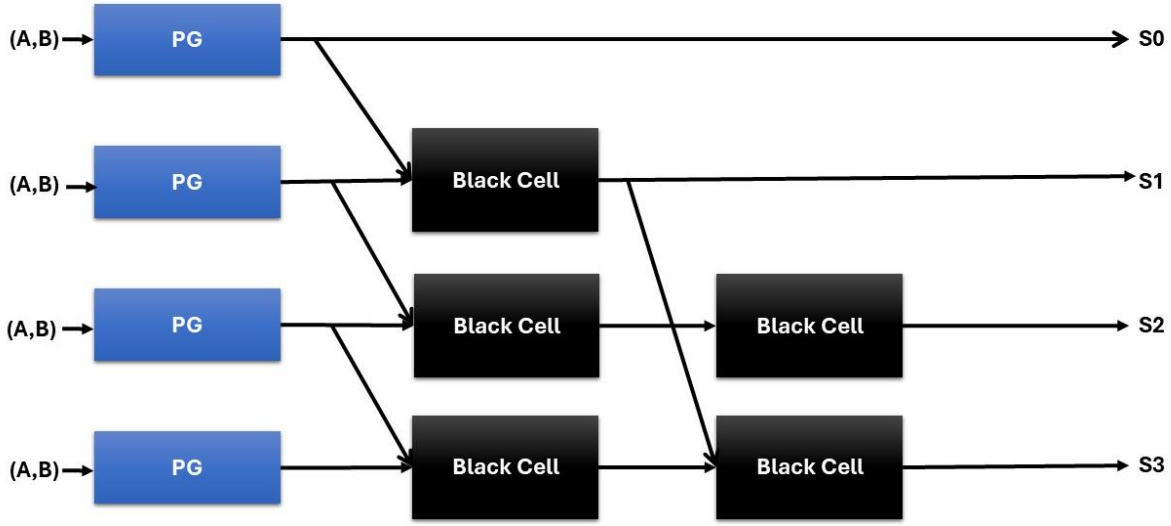

2.2.2 4-Bit Brent Kung Adder

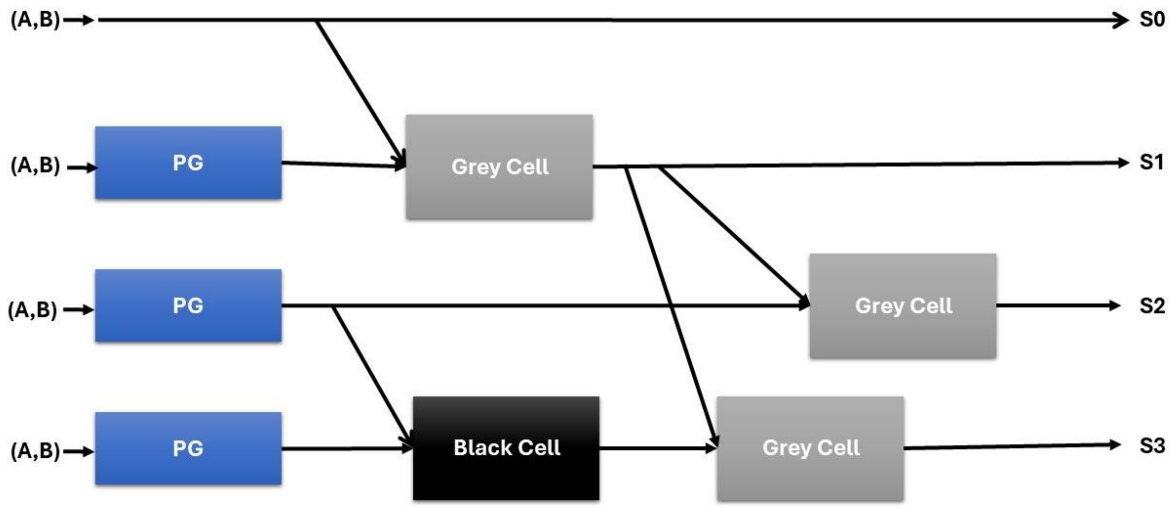

2.2.3 4-Bit Han Carlson Adder

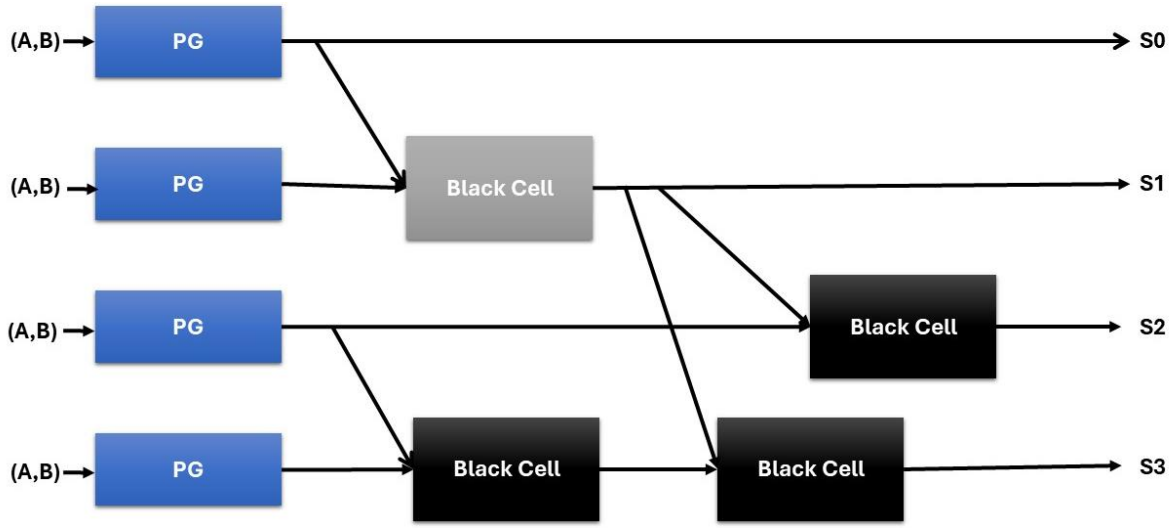

2.2.4 4-Bit Ladner Fischer Adder

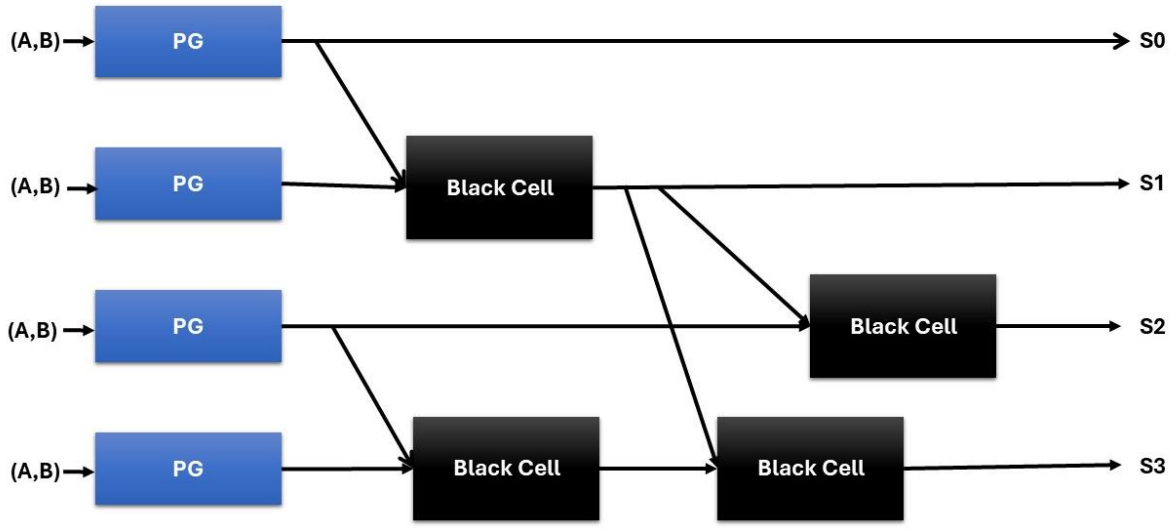

2.2.5 4-bit Weinberger Adder

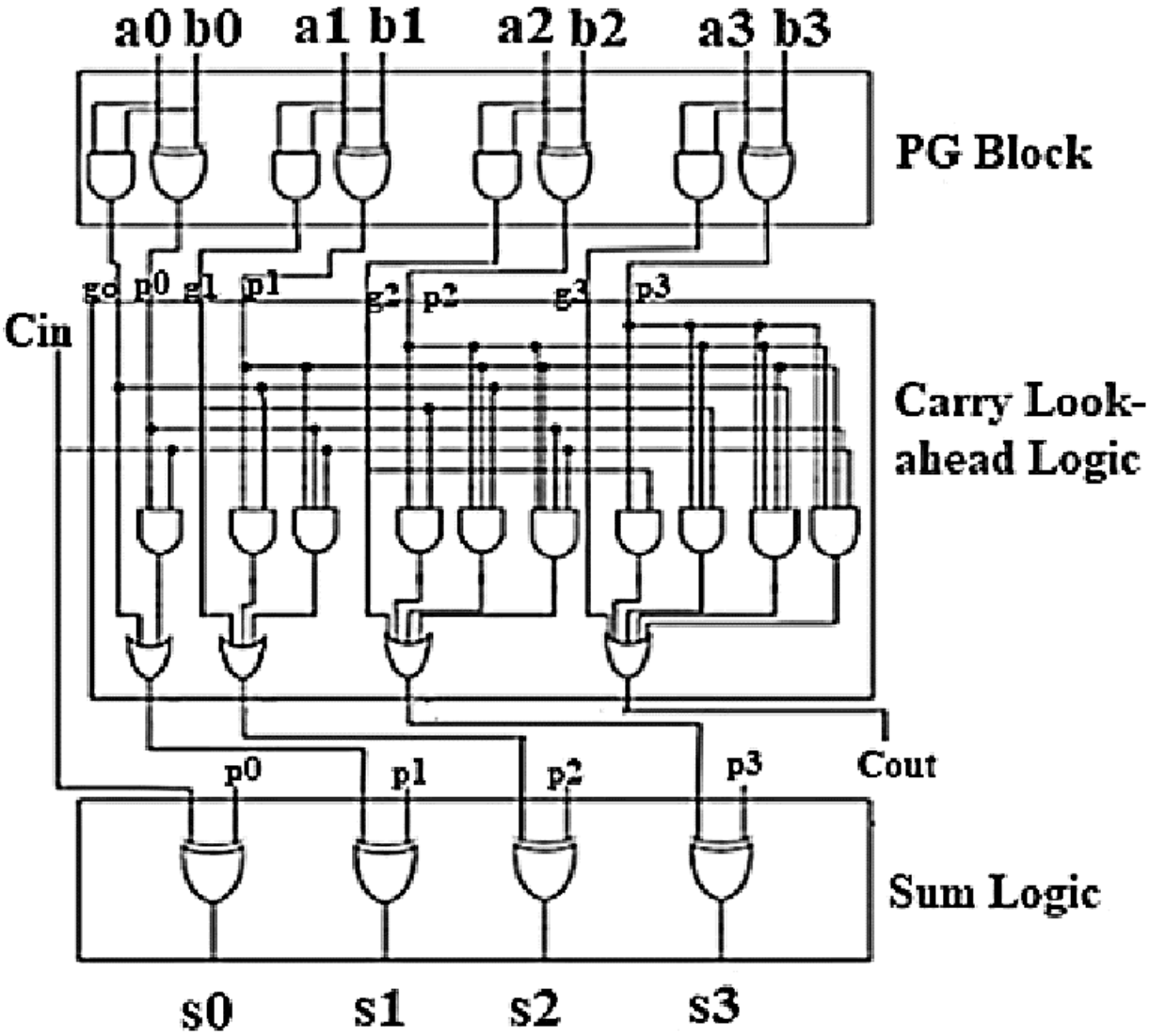

CHAPTER – 3 IMPLEMENTATION OF THE PROJECT

3.1 Components/tools used

SOFTWARE TOOLS USED :

Cadence Design Tools with GPDK 90 nm Technology:

- **Cadence Virtuoso**: Leveraged for the design and layout of digital circuits, allowing for the creation and customization of adder architectures with precision and flexibility.
- **Cadence Spectre**: Utilized for circuit simulation, enabling accurate performance analysis of adder designs under various operating conditions and input stimuli.
- **GPDK 90 nm Technology Process**: Chosen as the technology platform for design implementation and simulation, providing a standardized and well-characterized process for modelling digital circuits at the 90 nm scale. This process technology ensures that the adder designs are compatible with modern semiconductor manufacturing processes and accurately reflect real-world performance characteristics.

cādence

3.2 Schematic Illustration and Waveforms in Cadence tool

3.2.1 4-Bit Kogge Stone Adder

3.2.1.1 Schematic

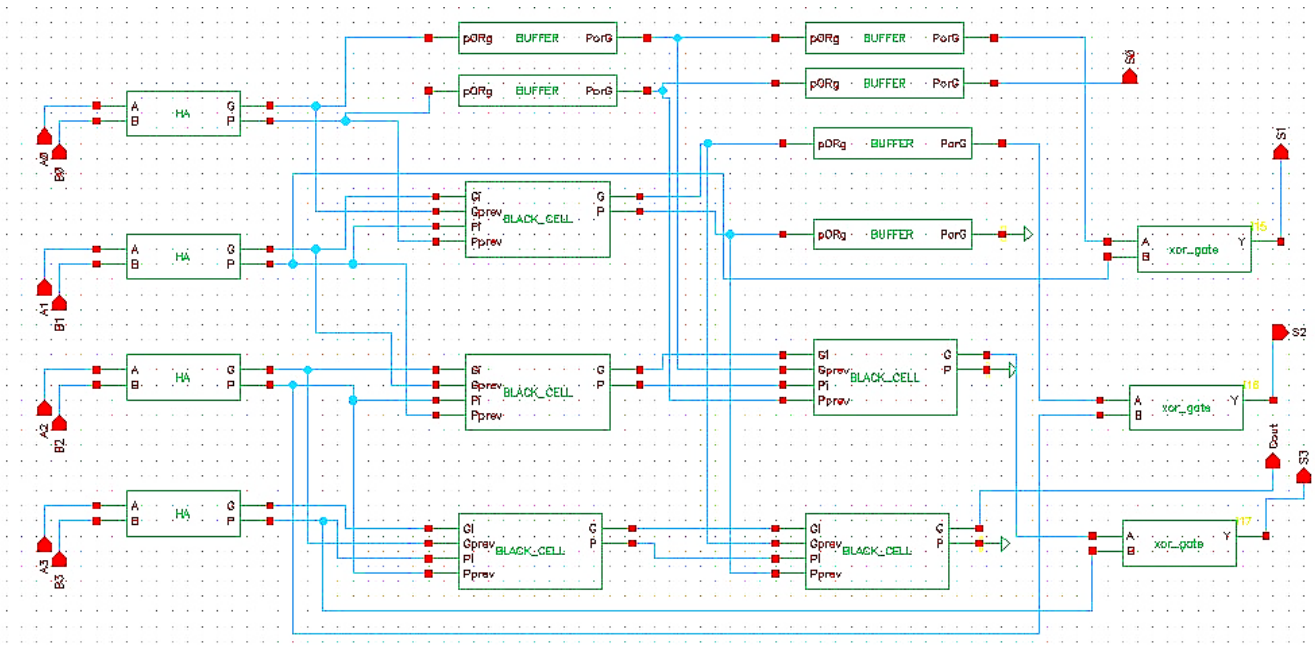

3.2.1.2 Test Bench

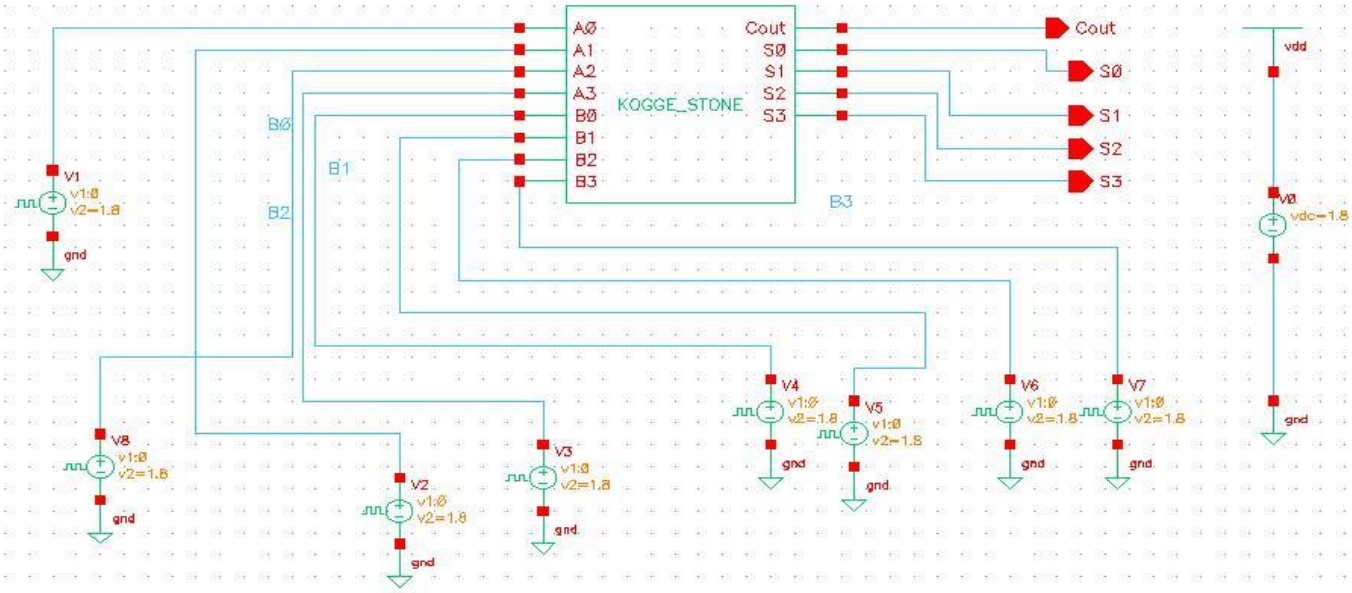

3.2.1.3 Output Waveform

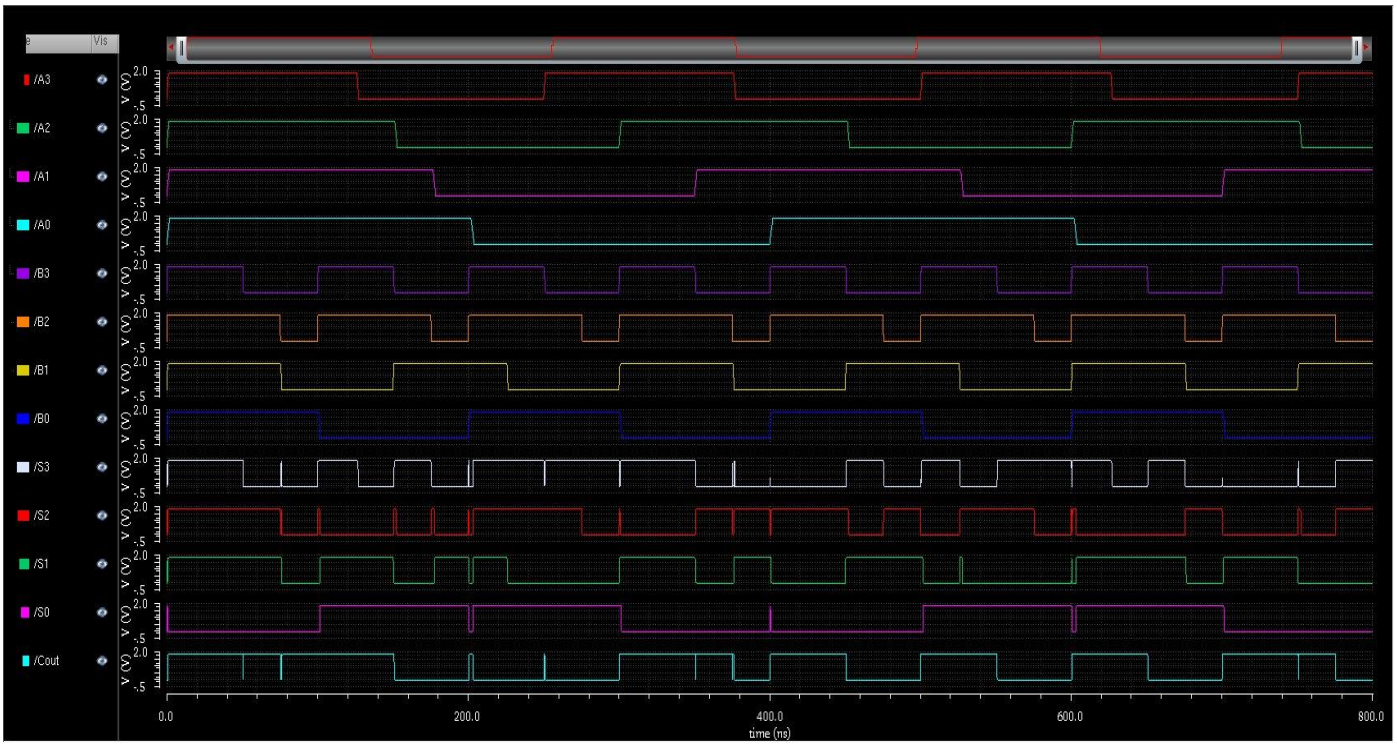

3.2.2 4-Bit Brent-Kung Adder

3.2.2.1 Schematic

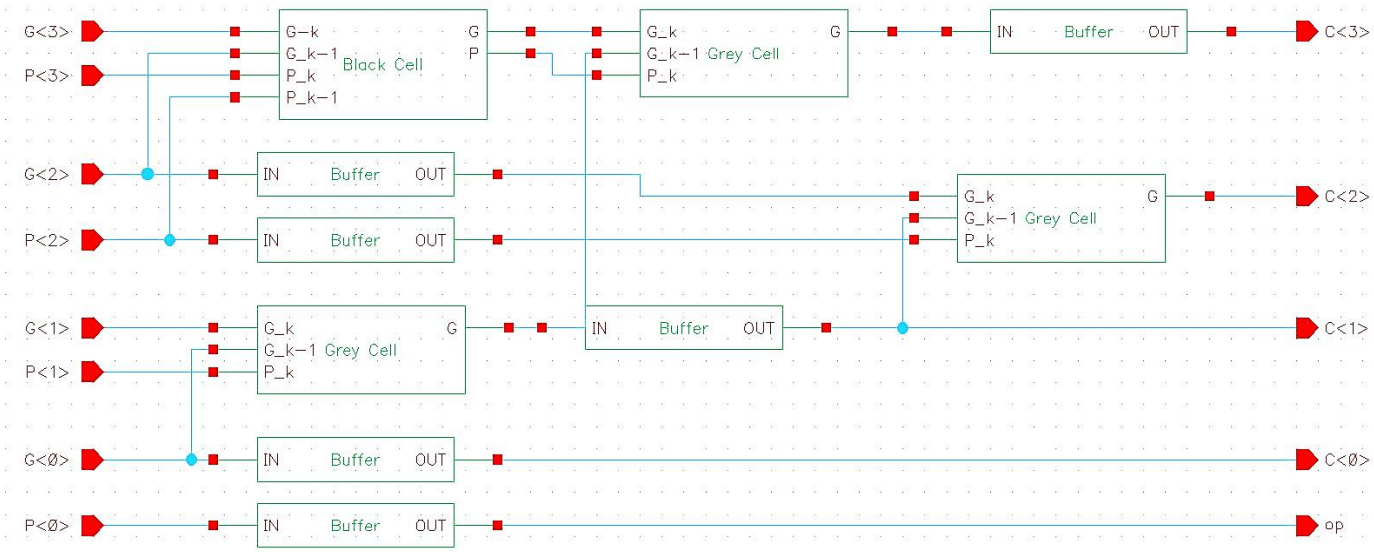

3.2.2.2 Test Bench

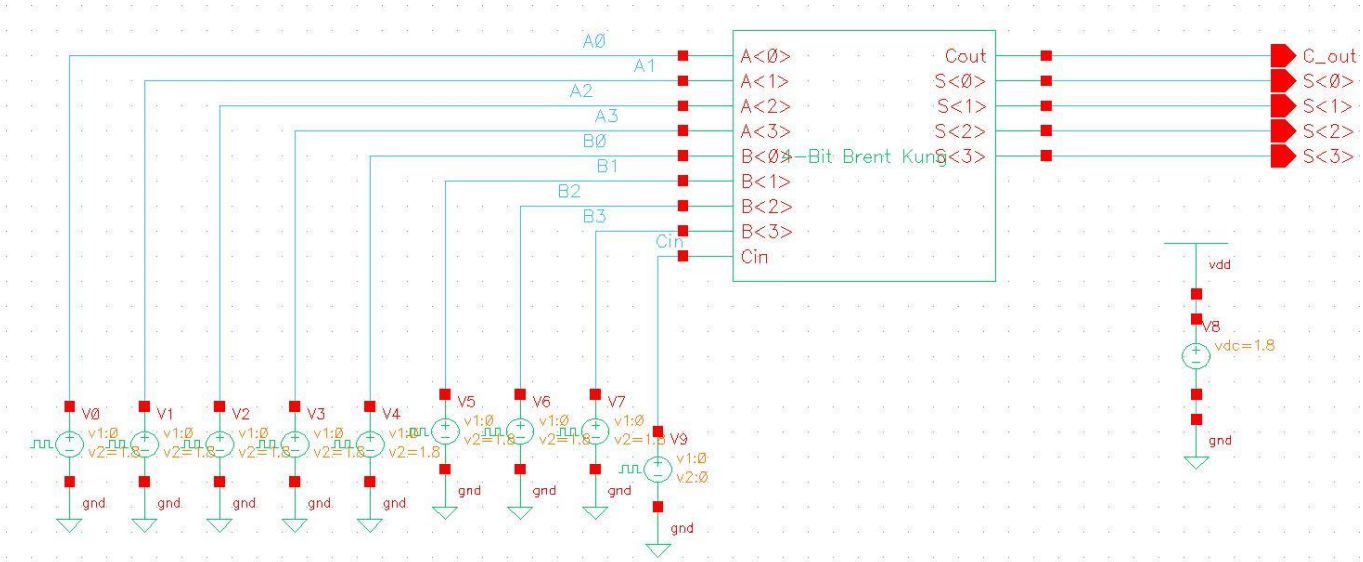

3.2.2.3 Output Waveforms

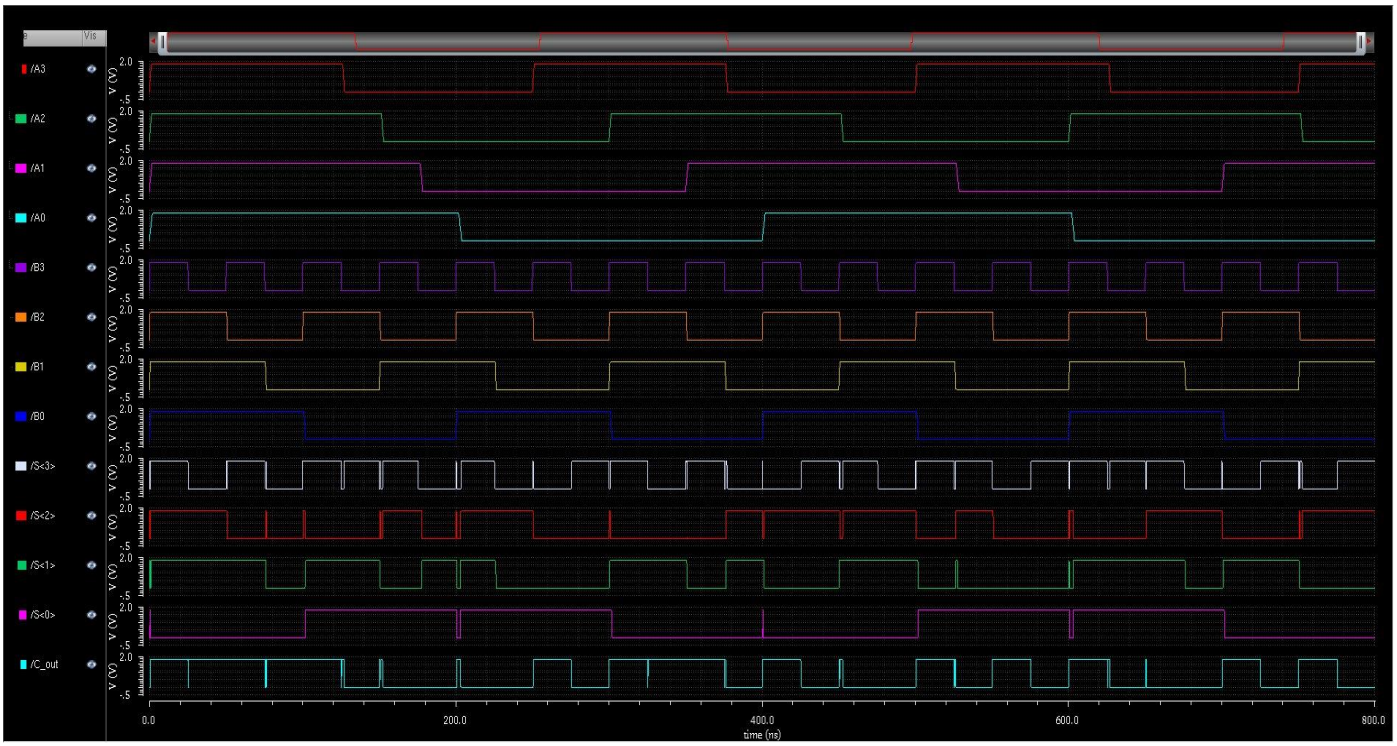

3.2.3 4-Bit Han Carlson Adder

3.2.3.1 Schematic

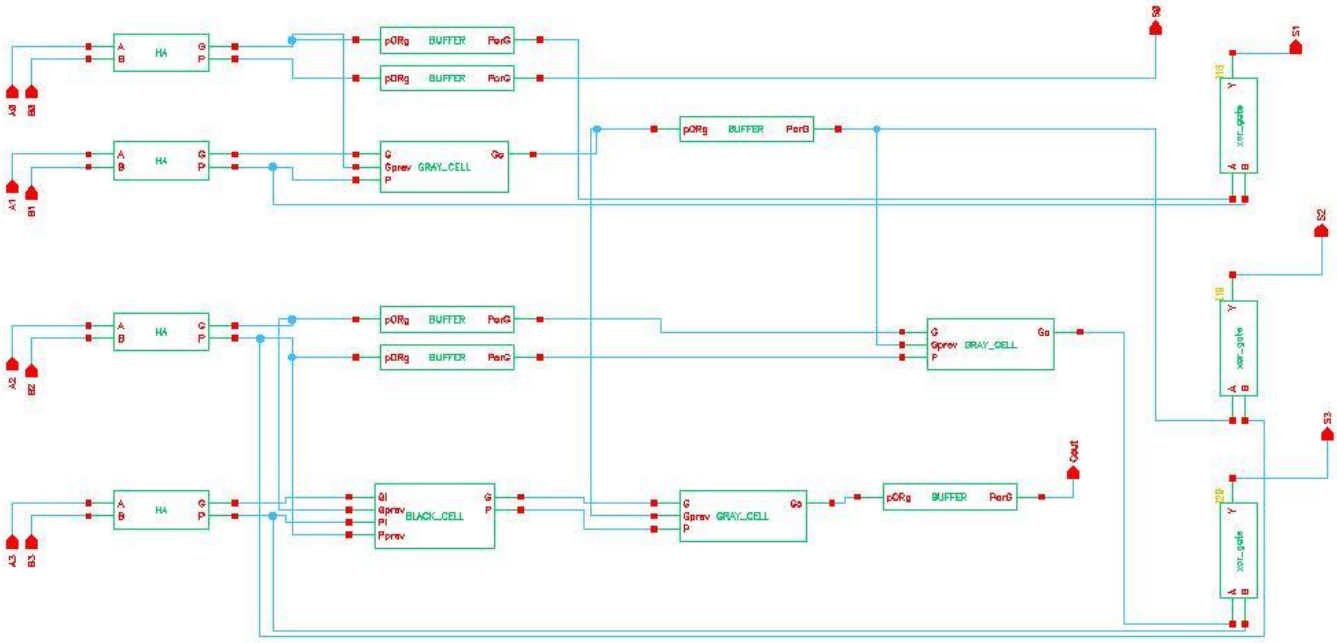

3.2.3.2 Test Bench

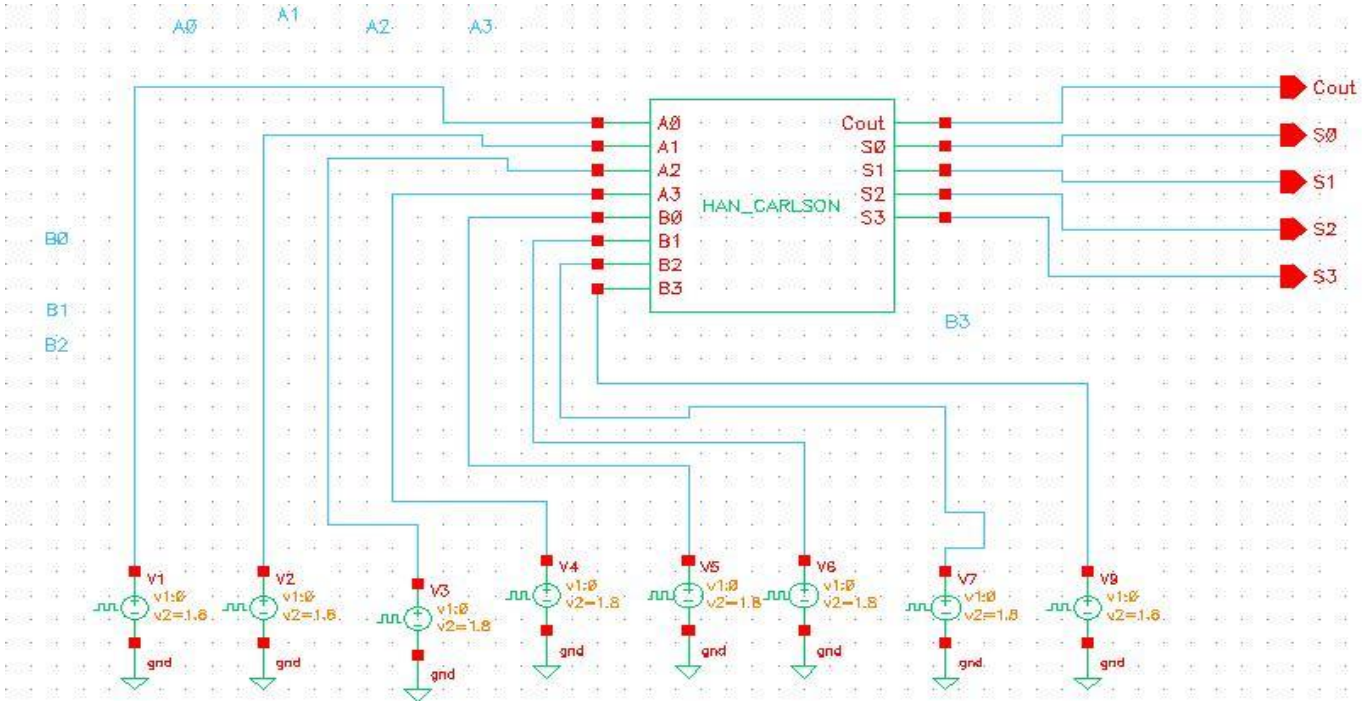

3.2.3.3 Output Waveforms

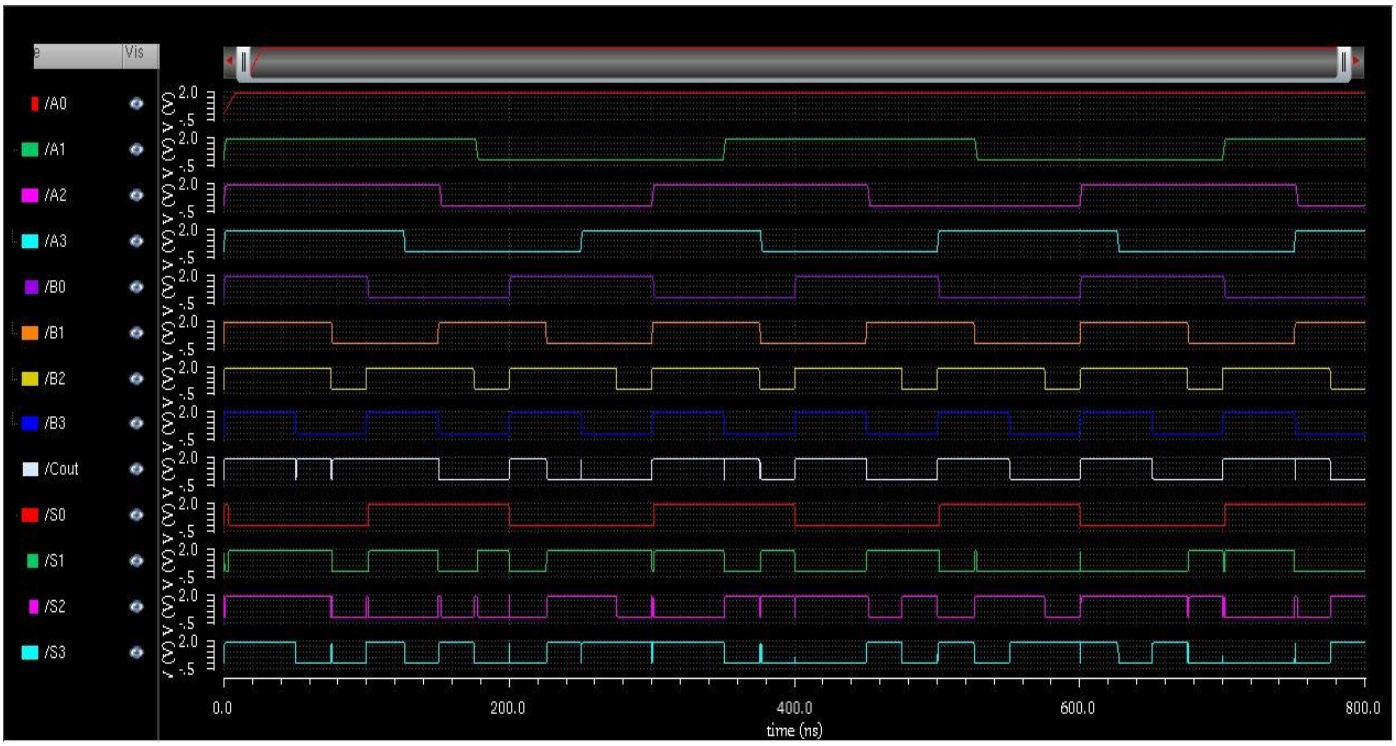

3.2.4 4-Bit Ladner Fischer Adder

3.2.4.1 Schematic

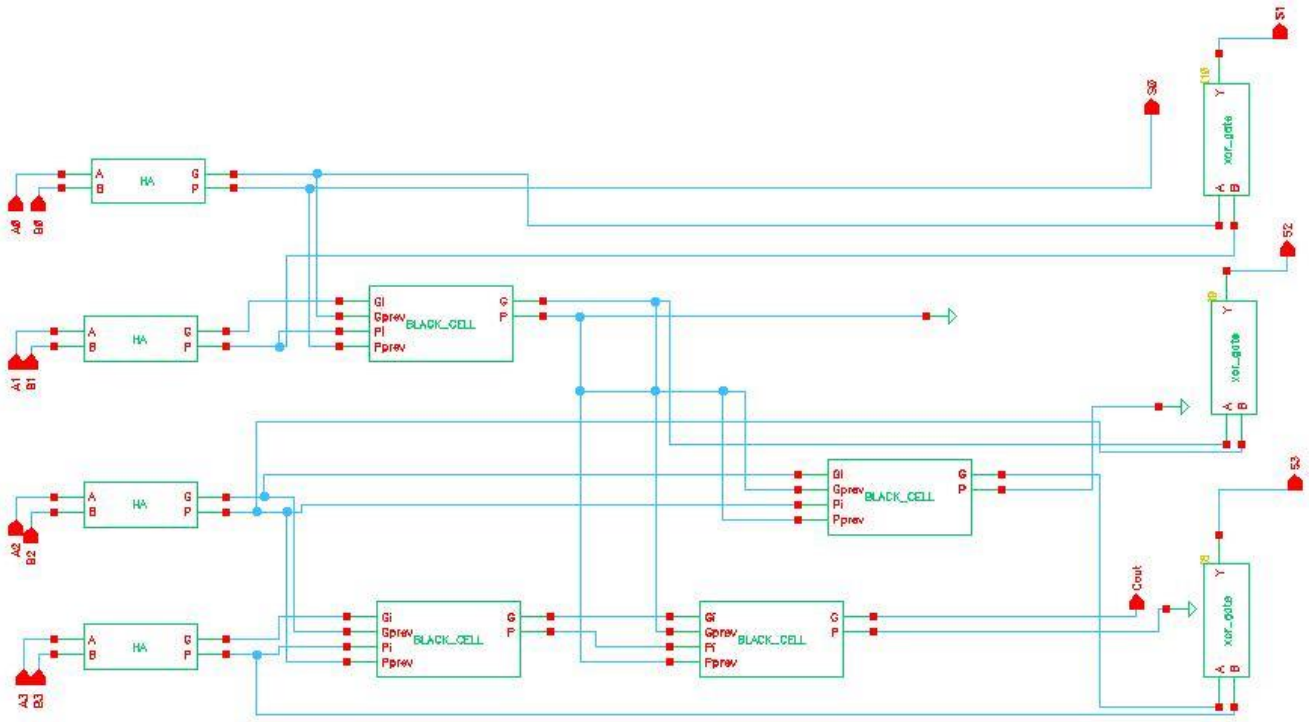

3.2.4.2 Test Bench

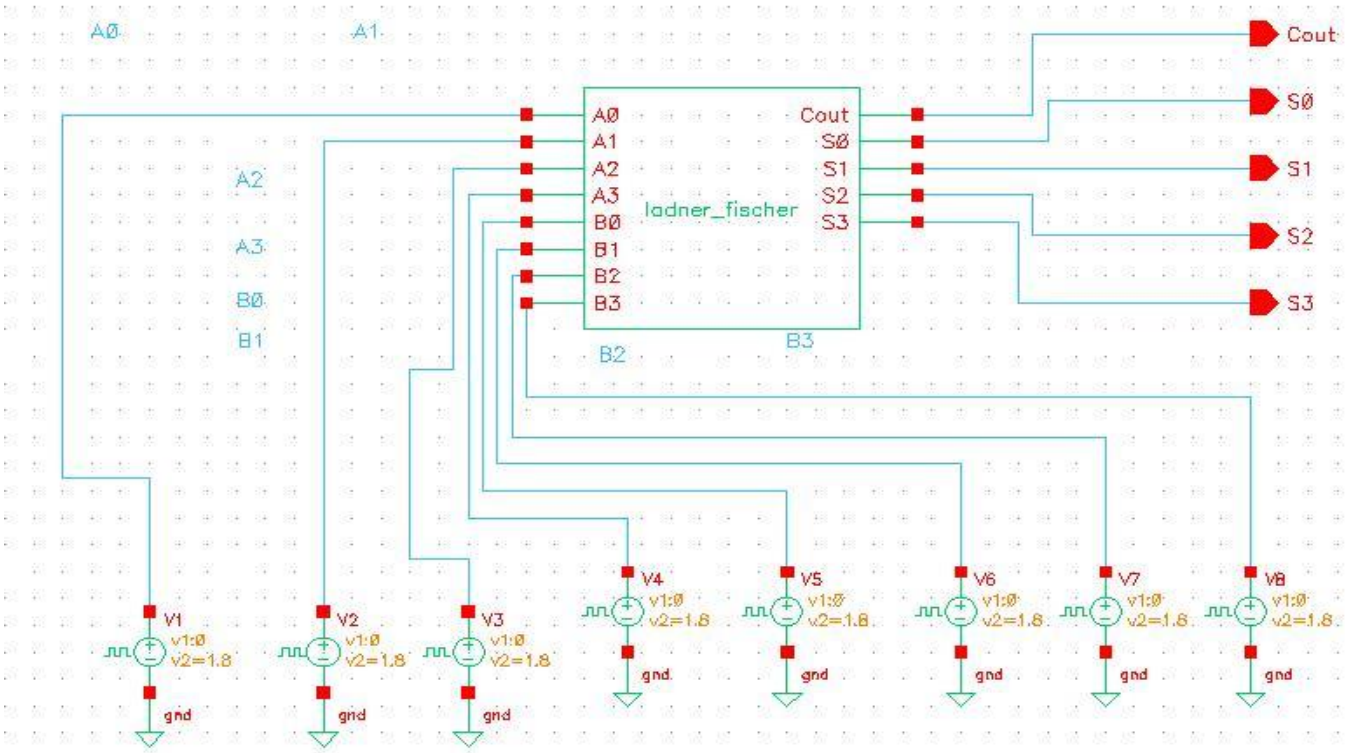

3.2.4.3 Output Waveform

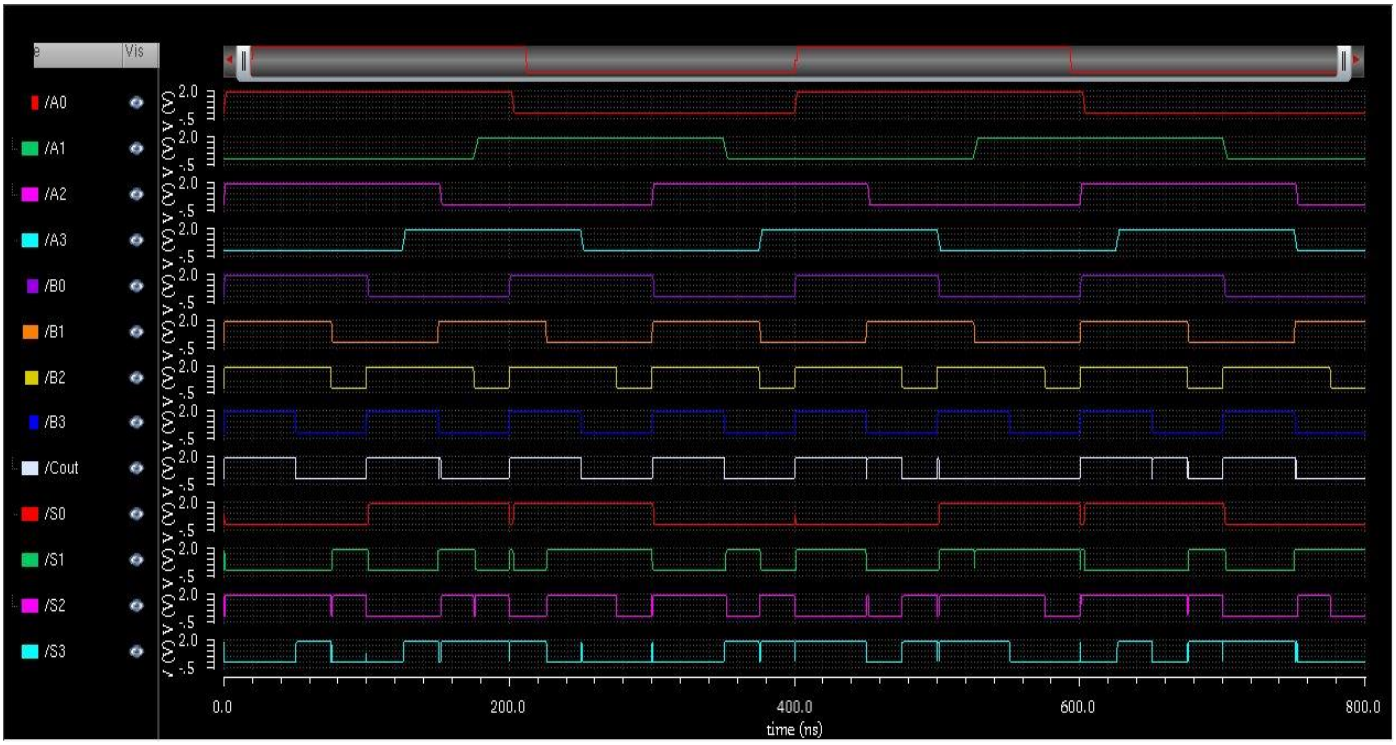

3.2.5 4-Bit Weinberger Adder

3.2.5.1 Schematic

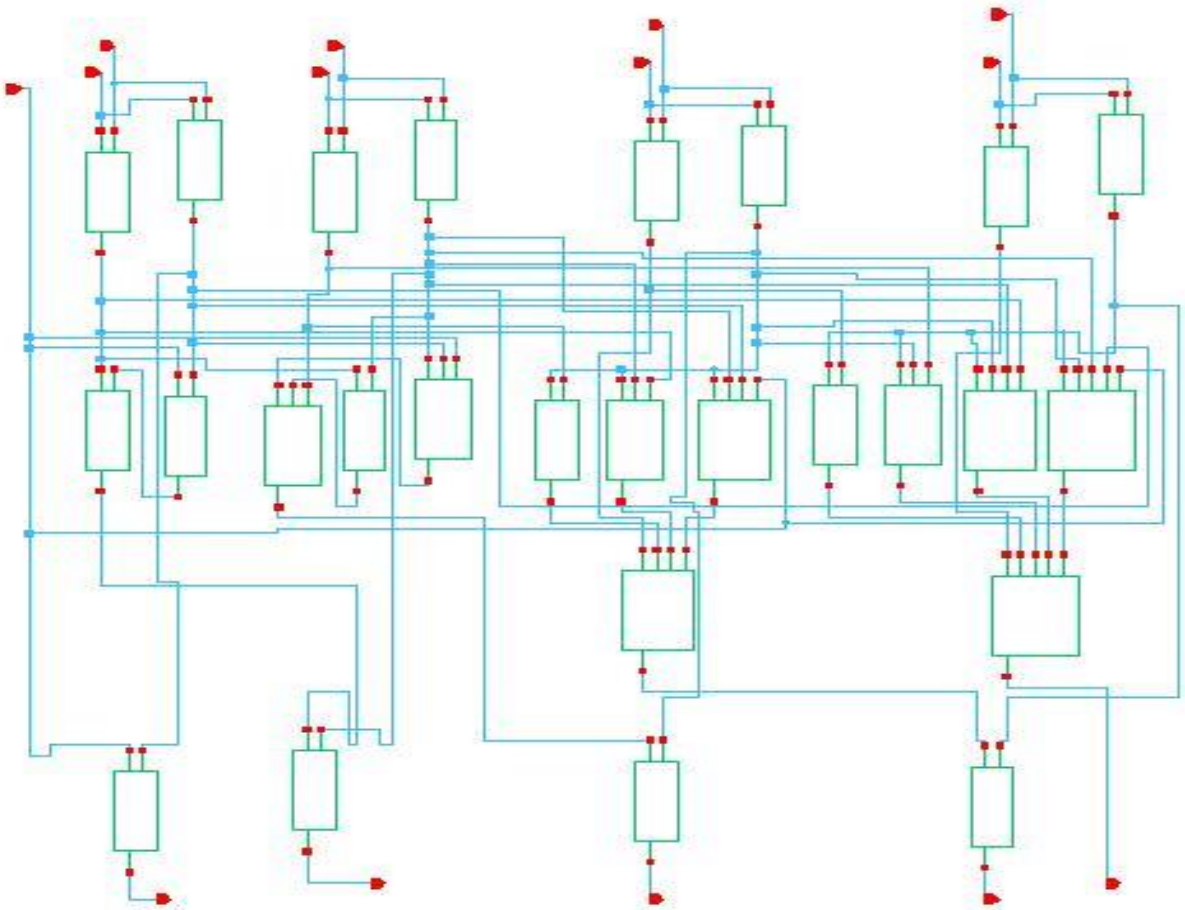

3.2.5.2 Testbench

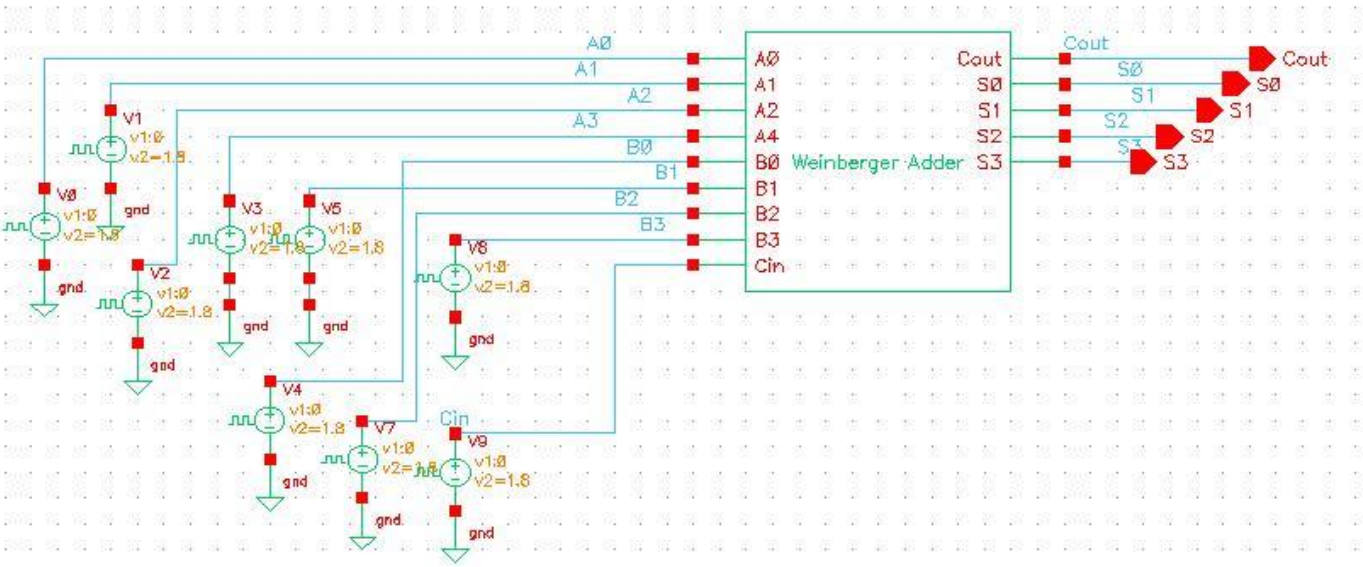

3.2.5.3 Output Waveforms

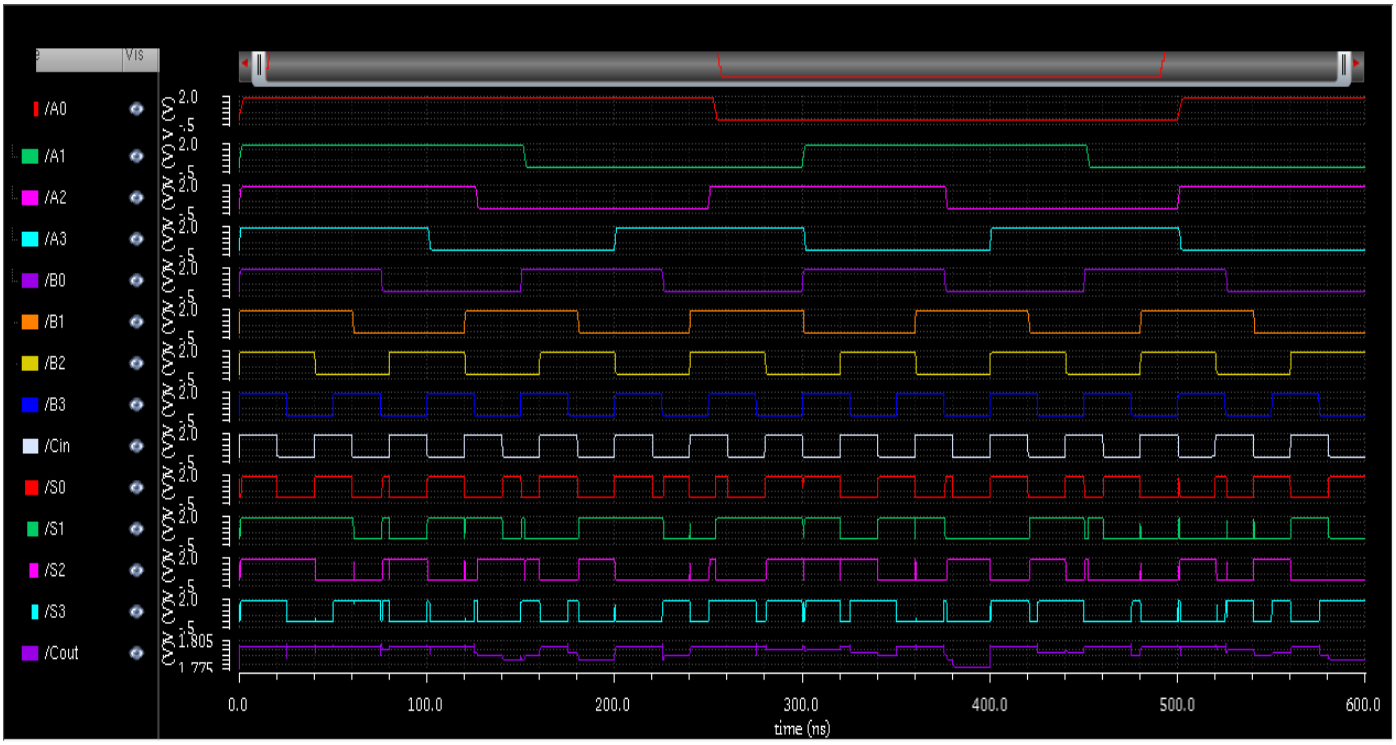

3.3 Description of Internal Components

3.3.1 PG Block

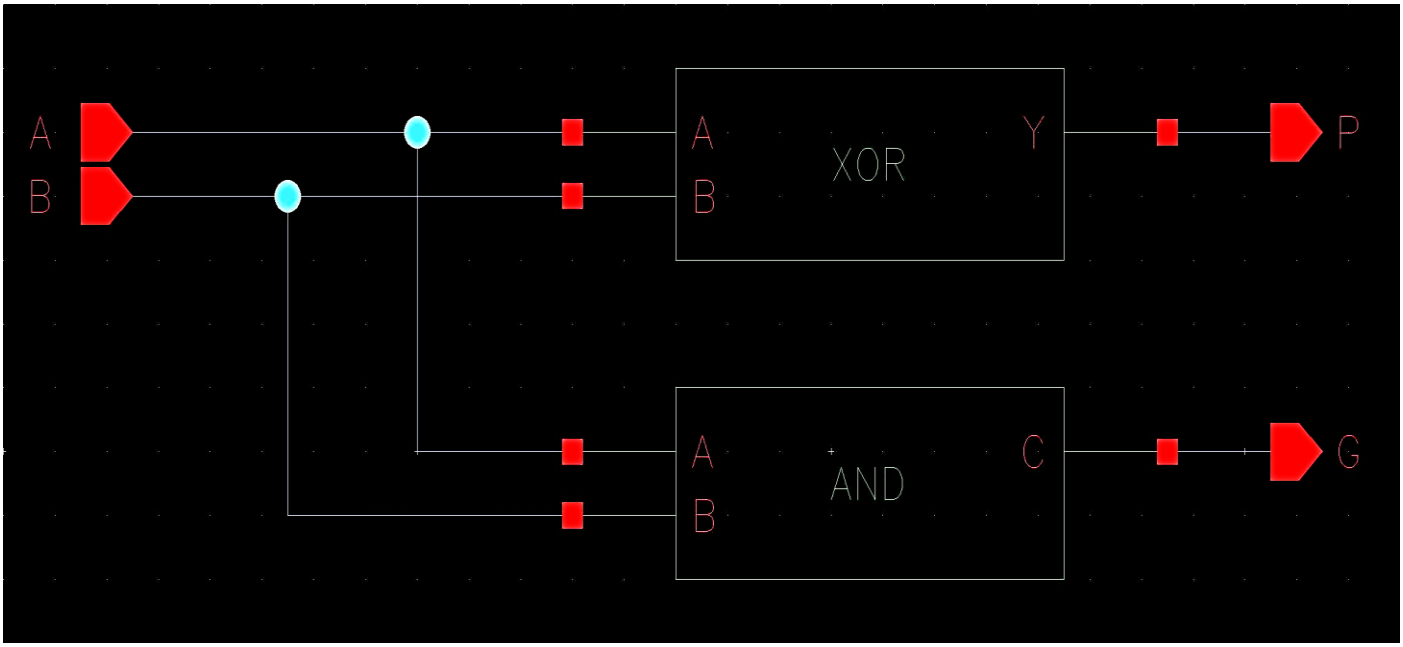

3.3.2 Black Cell

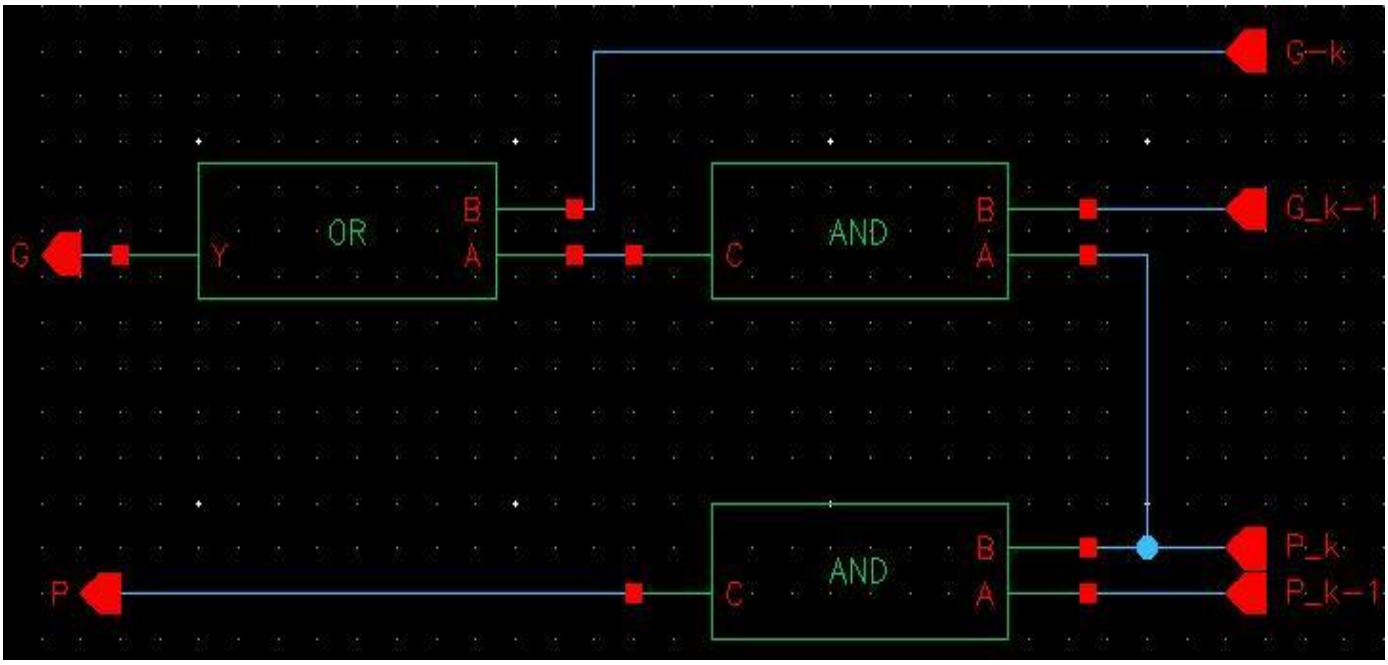

3.3.3 Grey Cell

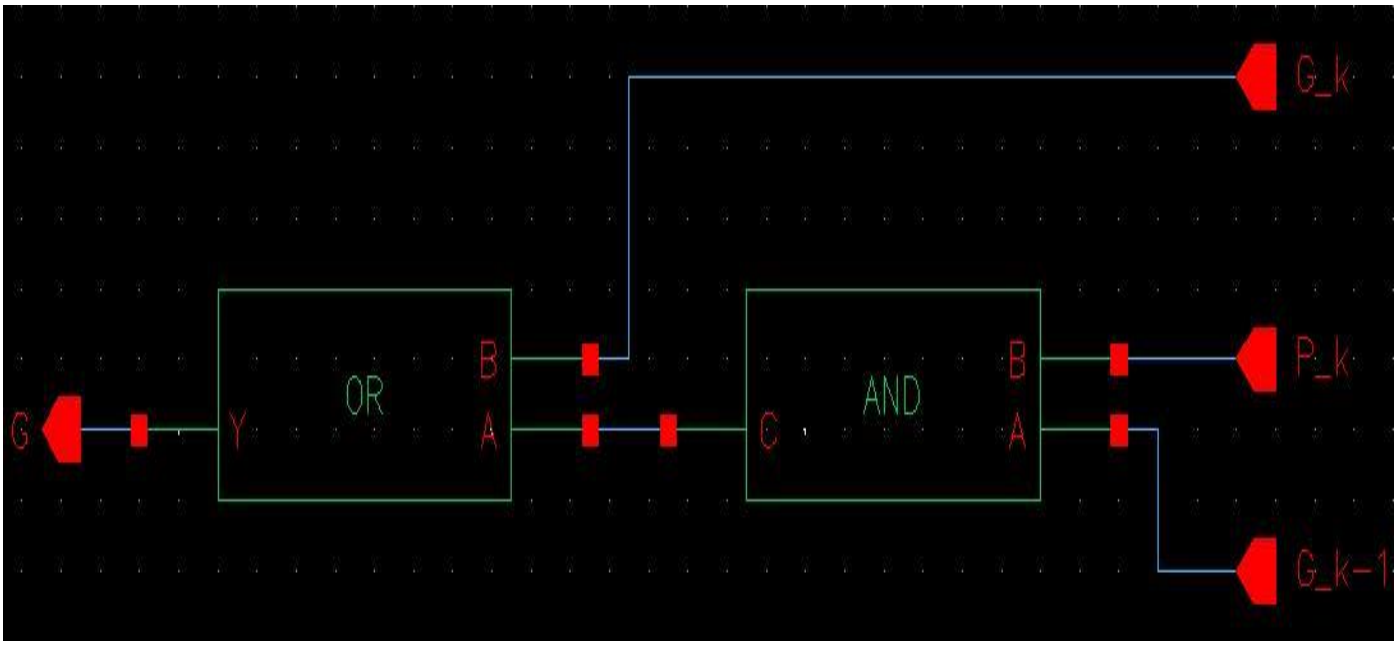

3.3.4 Post Processing Cell

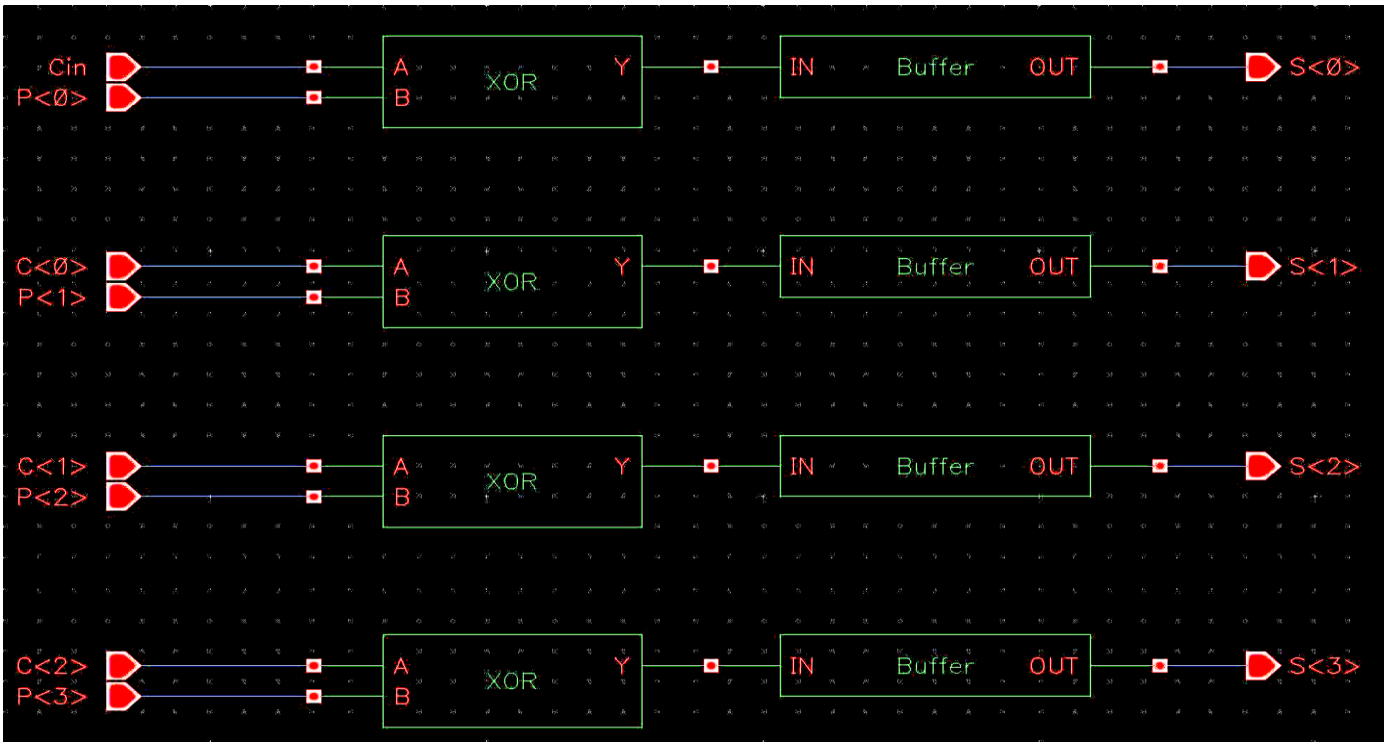

CHAPTER – 4 RESULTS OF THE PROJECT

4.1 Power Consumption

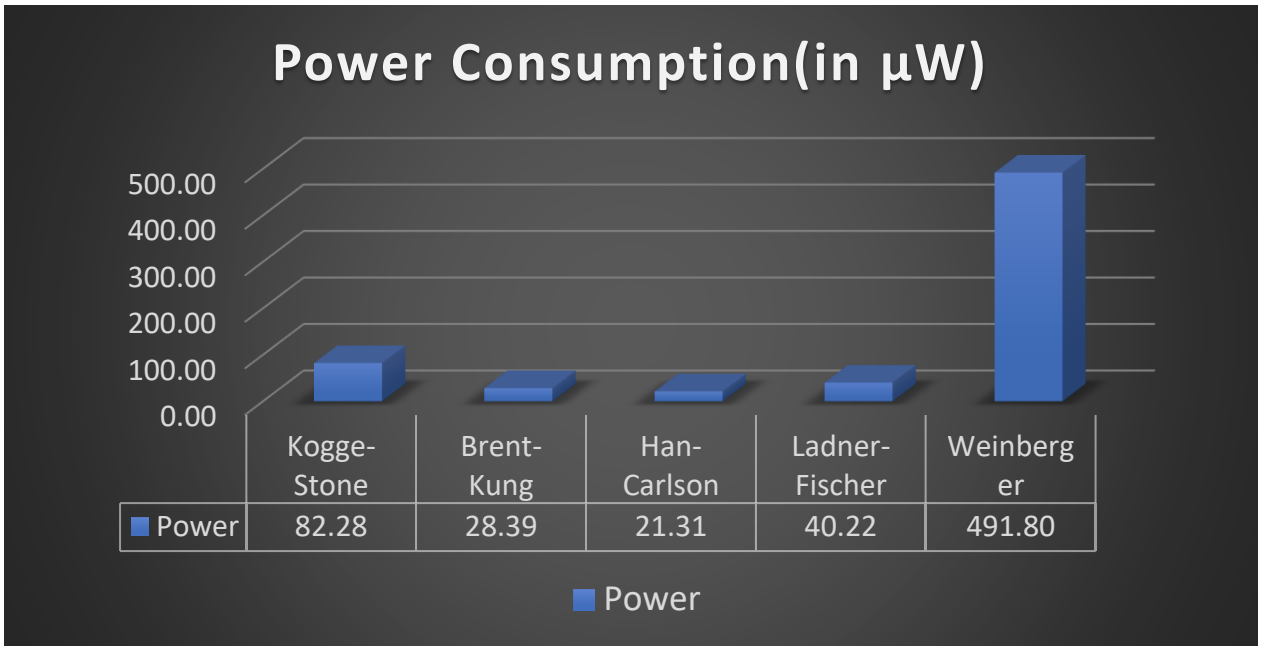

4.2 Transistor Count

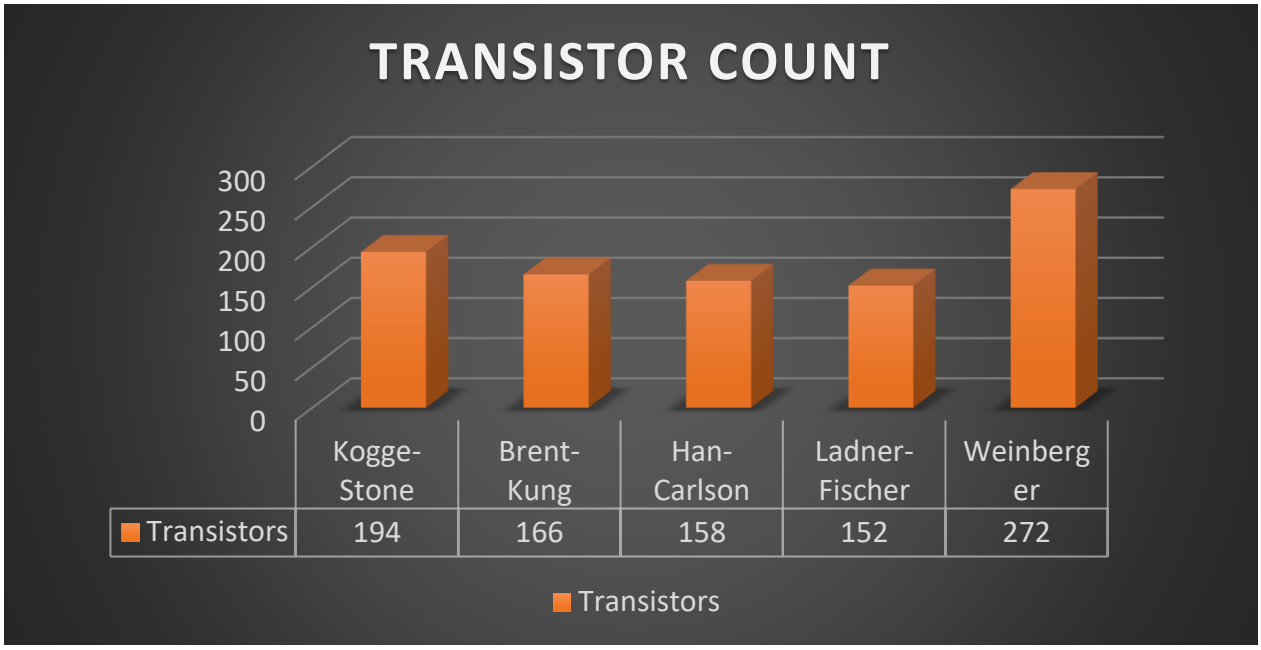

4.3 Delay

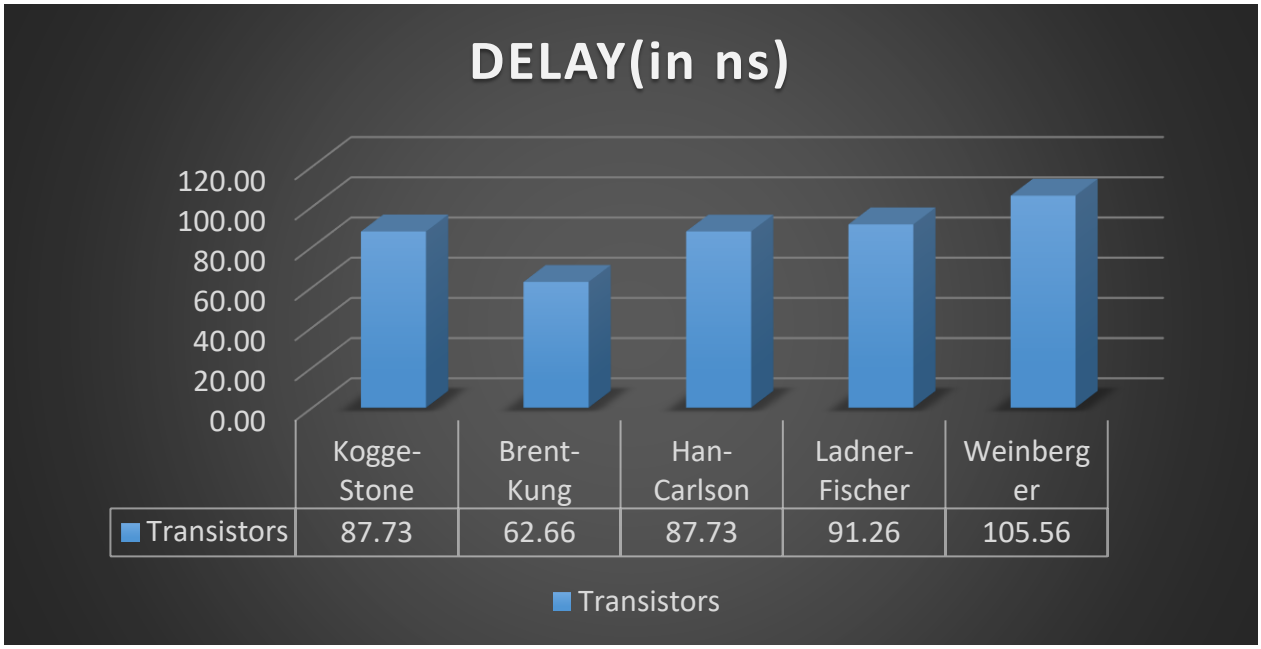

SUMMARY

- **Brent-Kung Adder:** Best suited for applications requiring the fastest addition speed, with the trade-off of a moderate transistor count and power consumption.
- **Kogge-Stone Adder:** Ideal for high-speed applications where delay is critical, despite the high area and power costs.
- **Ladner-Fischer Adder:** Offers the most area-efficient solution with the least transistor count, making it suitable for designs with stringent area constraints.
- **Han-Carlson Adder:** Stands out for its power efficiency, making it the best choice for power-sensitive applications while maintaining a reasonable delay.
- **Weinberger Adder:** Provides a balanced performance in terms of area, power, and speed, suitable for general-purpose use.

CONCLUSION

The choice of adder depends on the specific requirements of the application:

- For the lowest delay and fastest operation, the **Brent-Kung adder** is preferable.
- For the most power-efficient design, the **Han-Carlson adder** is the best choice.
- For the smallest area with the least transistor count, the **Ladner-Fischer adder** is ideal.

Overall, the comparison highlights the strengths and weaknesses of each adder architecture, providing valuable insights for selecting the appropriate adder for specific design requirements in the GPDK-90 technology.